SunliteLAZER Power Pack Installation Diagram

Connection Table
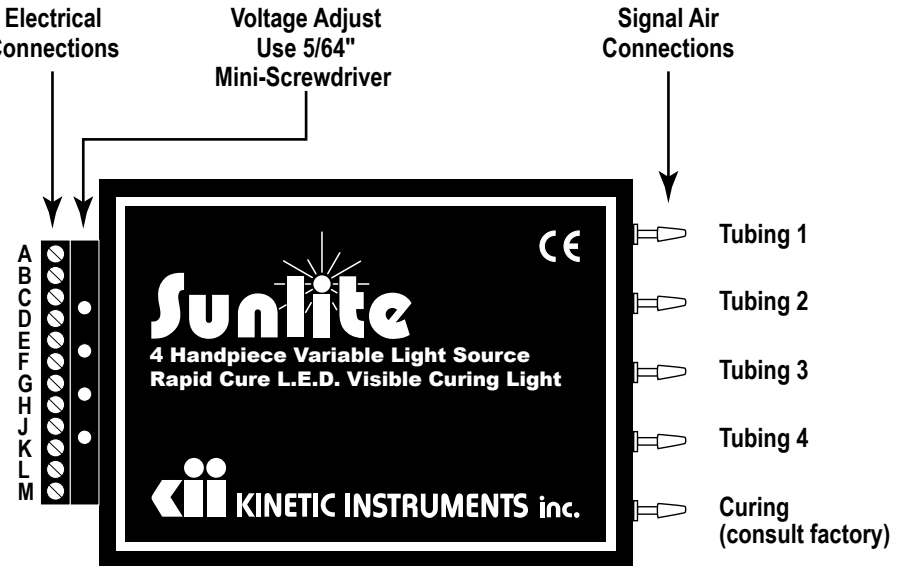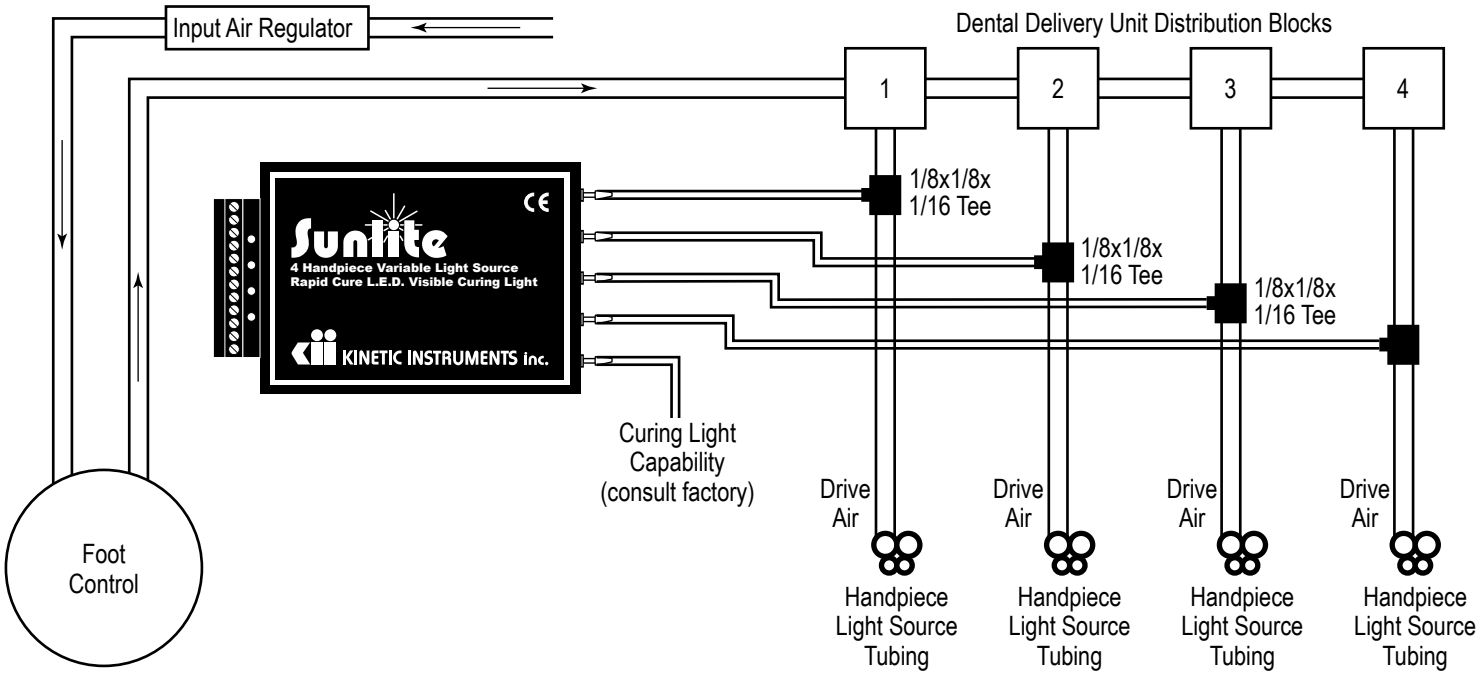
A - 9 VDC input power (+)
B - 9 VDC input power (-)
C - H/P tubing 1 white (+)
D - H/P tubing 1 black (-)
E - H/P tubing 2 white (+)
F - H/P tubing 2 black (-)
G - H/P tubing 3 white (+)
H - H/P tubing 3 black (-)
J - H/P tubing 4 white (+)
K - H/P tubing 4 black (-)
L - Curing (consult factory) (+)
M - Curing (consult factory) (-)